1. The transfer and output dc current-voltage characteristics of one top-gated graphene field-effect transistor (GFET) are shown in Fig. 1. The channel width (W) is 10 µm, the gate length (L) is 200 nm, the top-gate oxide thickness (t_{ox}) is 4 nm, the dielectric constant of the top-gate oxide ($\varepsilon_{r,ox}$) is 6.4, the vacuum permittivity (ε_0) is 8.85×10^{-12} F/m, and the electron charge (e) is 1.6×10^{-19} C.

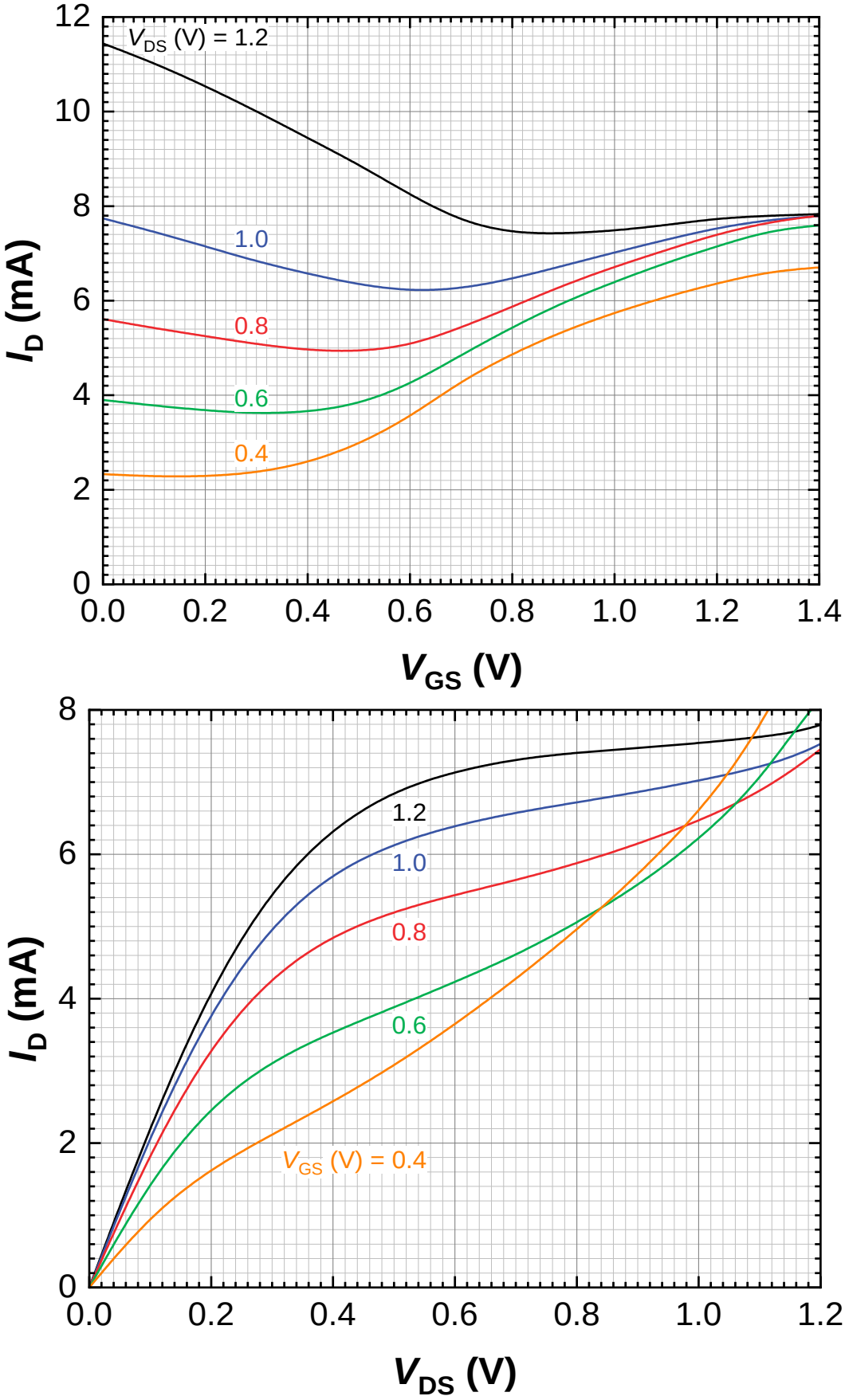

Figure 1 The dc current-voltage characteristics of a GFET. (top) Transfer characteristics. (bottom) Output characteristics.

(a) The GFET is connected in the amplifier shown in Figure 2. Find the power supply voltage (V_{DD}) such that the dc operating point Q is at V_{DS} = 0.8 V. Mark the locations of the dc operating point Q at the transfer and output characteristics in Fig. 1.

(b) Find the concentration of ambient doping in this GFET based on the characteristics which correspond to the dc operating point Q in (a). Neglect quantum capacitance and thermal and puddle charges. Comment on the type of doping.

(c) Calculate the transconductance (g_m), output conductance (g_d), and the intrinsic transistor gain ($A = g_m/g_d$) of the GFET in the dc operating point Q in (a). Plot the equivalent model of a GFET valid in the ac small-signal regime at low frequencies.

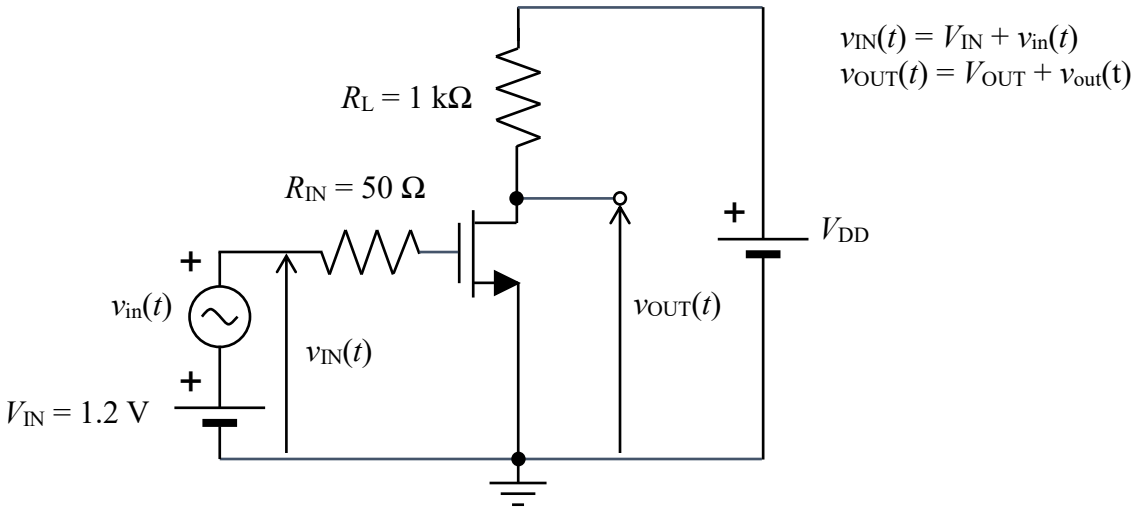

Figure 2 GFET in the common-source amplifier.

(d) Derive the expression for the low-frequency voltage gain $A_v = v_{out}/v_{in}$ and calculate its numerical value in the amplifier shown in Fig. 2 in the operating point Q in (a). Here, v_{in} and v_{out} are the ac components of the input and output voltage, respectively. Use the equivalent model of a GFET from (c).

(e) Define admittance (y) and hybrid (h) parameters of a two-port network in a small-signal ac regime. Use the definitions to find the expressions for y_{11}, y_{21}, and h_{21} as a function of the phasor voltages (V_1 and V_2) and currents (I_1 and I_2) in the network. Express the intrinsic current gain (h_{21}) as a function of y parameters.

(f) Derive the expression for y_{11}, y_{12}, y_{21}, and y_{22} in the case of a high-frequency intrinsic GFET.

(g) Derive the expression for h_{21} in the case of a high-frequency intrinsic GFET. Find the expression for the intrinsic cut-off frequency (f_T) and calculate its numerical value in the dc operating point Q in (a).

(h) Derive the expressions for the transconductance g_m of a GFET based on the linear approximation of its dc current-voltage characteristics $I_D(V_{GS}, V_{DS})$.

(i) Find numerical values of the field-effect carrier mobility (μ) and charge carrier velocity (v) based on the numerical value of the transconductance calculated in (c) and the expression for g_m derived in (h). Assume that the velocity is smaller than the saturation velocity (v_s). Comment on the obtained value of the carrier mobility (i.e., is it too small or too large for graphene) and suggest a possible reason for such value.

(j) Find the expression for the maximum frequency of oscillation (f_{max}) and calculate its numerical value in the dc operating point Q in (a) in the semi-intrinsic case, i.e., when y_{12}, y_{21}, and y_{22} parameters of the GFET are given in (f) and y_{11} is determined from the semi-intrinsic FET with the gate resistance R_G = 20 Ω. The unilateral power gain is given by

$$G' = \frac{|y_{21} - y_{12}|^2}{4\left(\mathrm{Re}(y_{11})\,\mathrm{Re}(y_{22}) - \mathrm{Re}(y_{12})\,\mathrm{Re}(y_{21})\right)}.$$

2. The Hamiltonian in graphene is

$$\mathbf{H}(\mathbf{k}) = \begin{bmatrix} 0 & -\gamma f(\mathbf{k}) \\ -\gamma f^*(\mathbf{k}) & 0 \end{bmatrix}$$

   (a) Derive expression for the eigen function $\boldsymbol{\psi}(\mathbf{k})$ as a function of $f(\mathbf{k})$

   (b) Simplify the obtained expression for the wave function around the Dirac point $\mathbf{K}$ where $f(\mathbf{k}) = 3a(-q_x + jq_y)/2$, $\mathbf{k} = \mathbf{K} + \mathbf{q}$.

   (c) Derive expression for the scattering matrix element $\langle \mathbf{k}_f, \mathbf{r} | H_{scatt}(\mathbf{r}) | \mathbf{k}_i, \mathbf{r} \rangle$ in graphene. What is the important consequence of this expression?

3. Explain schematically how pitch-halving can be obtained by spacer patterning technique.

1. Plots:

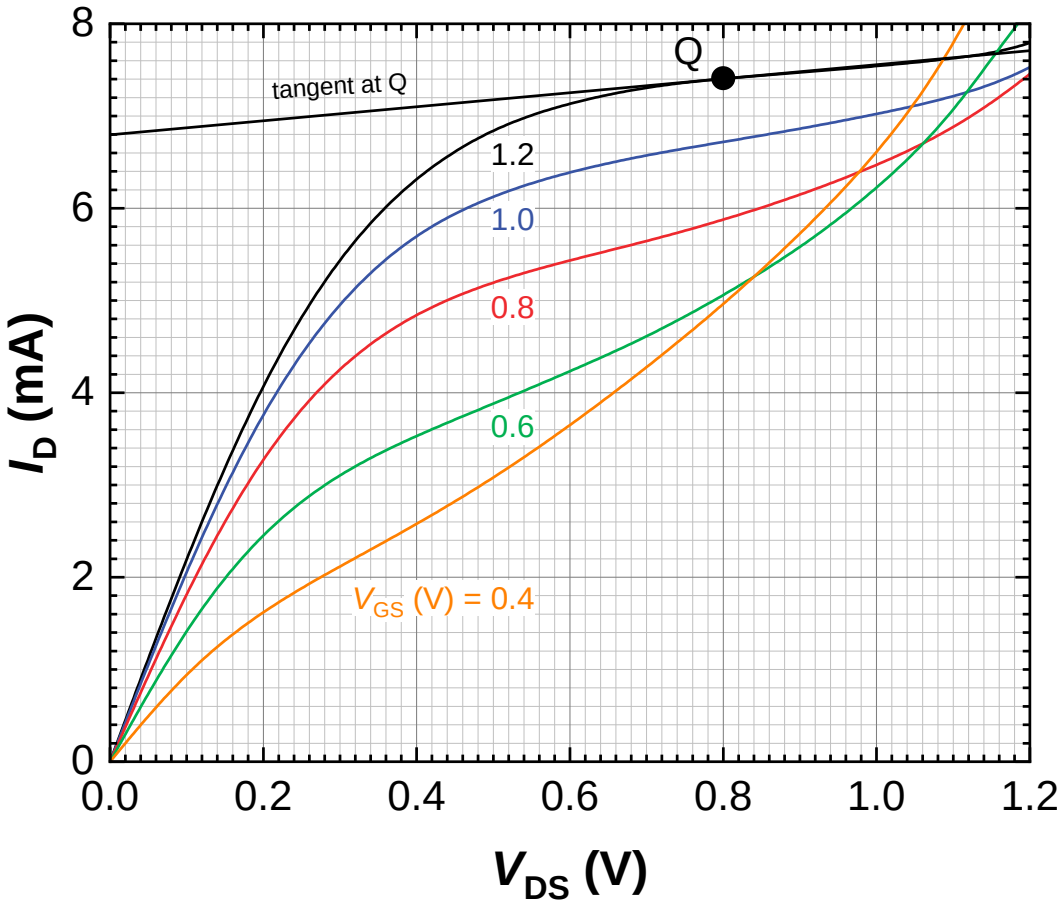

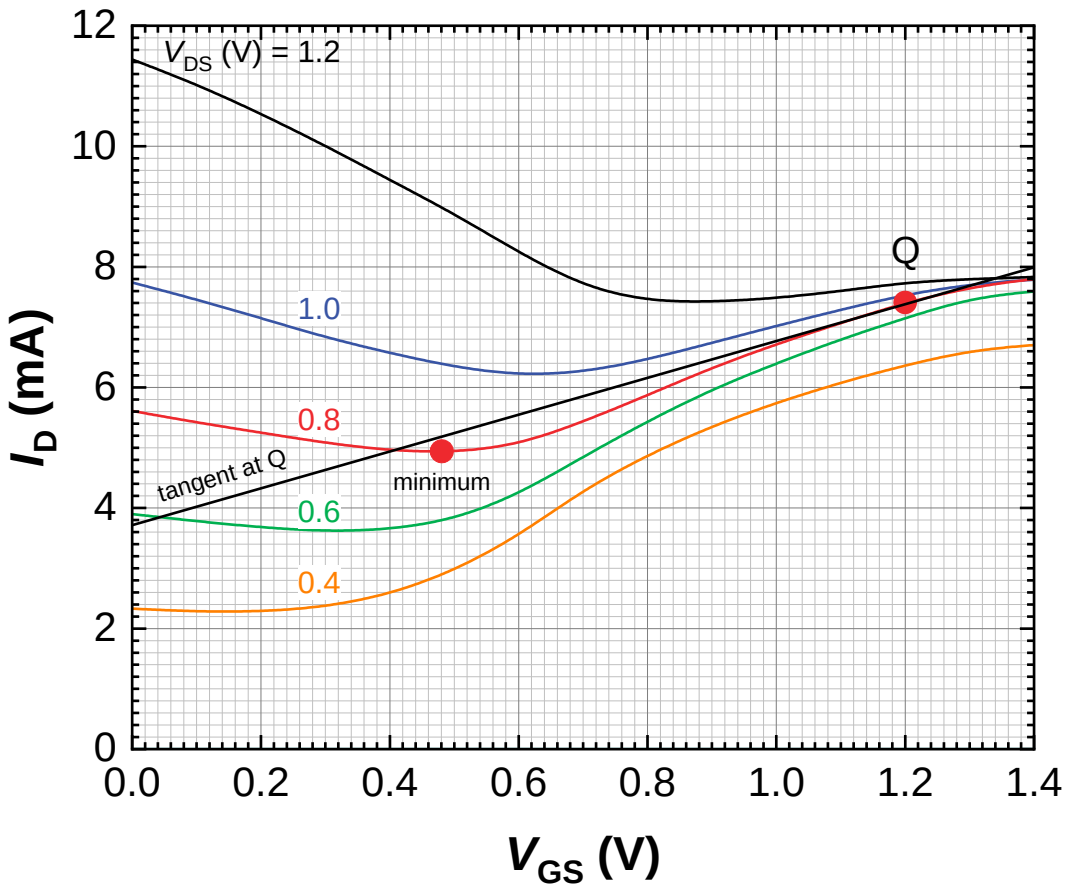

(a) Slide 97.
$V_{GS} = V_{IN} = 1.2$ V
$V_{DS} = 0.8$ V
$I_D = 7.4$ mA
$V_{DD} = V_{DS} + R_L I_D = 8.2$ V

(b) Slides 76, 77. The minimum of the transfer curve is at $V_{GSth} = V_{th} + V_{DS}/2 = 0.48$ V for $V_{DS} = 0.8$ V. Hence $V_{th} = V_{GSth} - V_{DS}/2 = 0.48$ V – 0.4 V = 0.08 V.

The total charge in the channel is $Q = Q_{imp} - C_G V_{GS}$ which equals 0 at $V_{GS} = V_{th}$. Hence

$$Q_{imp} = C_G V_{th}$$

$$epWL = \varepsilon_{ox} \frac{WL}{t_{ox}} V_{th}$$

$$p = \frac{\varepsilon_{r,ox}\varepsilon_0}{t_{ox}} \frac{V_{th}}{e}$$

$$p = 0.7 \times 10^{12}\ \text{cm}^{-2} > 0$$

The ambient doping is p-type, as expected for a GFET on SiO_2 substrates.

(c) Slides 92, 98. The transconductance and output conductance can be found from the tangents at the transfer and output characteristics in the dc operating point Q.

$$g_m = \left.\frac{\partial i_D}{\partial v_{GS}}\right|_Q \approx \frac{8\ \text{mA} - 3.7\ \text{mA}}{1.4\ \text{V}} = 3.1\ \text{mS}$$

$$g_d = \left.\frac{\partial i_D}{\partial v_{DS}}\right|_Q \approx \frac{7.7\ \text{mA} - 6.8\ \text{mA}}{1.2\ \text{V}} = 0.75\ \text{mS} \Rightarrow r_d = \frac{1}{g_d} = 1.33\ \text{k}\Omega$$

$$\text{A} = \frac{g_m}{g_d} = 4.1$$

Q = dc operating point

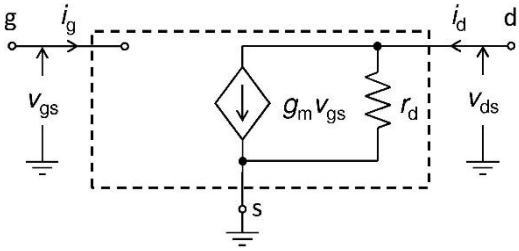

(d) Slide 93. The ac small-signal model of the amplifier is

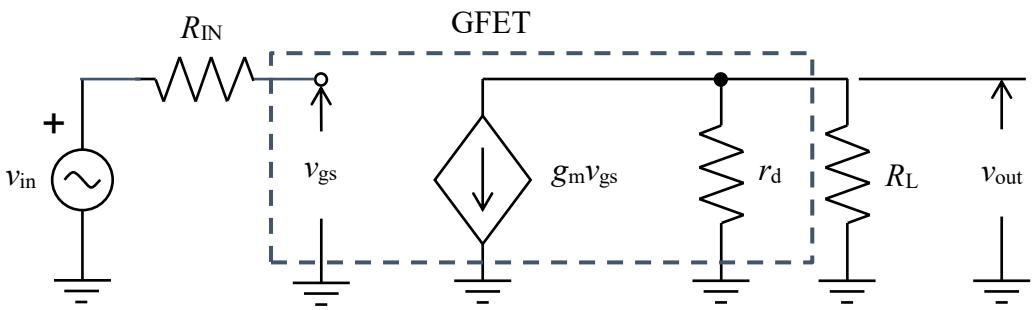

$$A_v = \frac{v_{out}}{v_{in}} = -g_m (r_d \parallel R_L) = -\frac{R_L}{R_L + r_d} A = -\frac{1000}{1000 + 1330} 4.1 = -1.7$$

(e) Slides 101, 102.

$I_1 = y_{11} V_1 + y_{12} V_2$

$I_2 = y_{21} V_1 + y_{22} V_2$

$V_1 = h_{11} I_1 + h_{12} V_2$

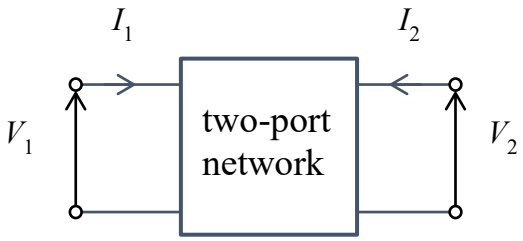

$I_2 = h_{21} I_1 + h_{22} V_2$

$$y_{11} = \left.\frac{I_1}{V_1}\right|_{V_2=0} \qquad y_{21} = \left.\frac{I_2}{V_1}\right|_{V_2=0} \qquad h_{21} = \left.\frac{I_2}{I_1}\right|_{V_2=0}$$

(f) Slide 103.

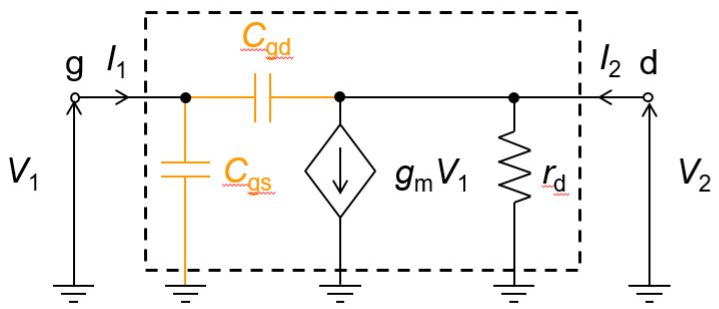

$$y_{11} = \left.\frac{I_1}{V_1}\right|_{V_2=0} \qquad y_{21} = \left.\frac{I_2}{V_1}\right|_{V_2=0}$$

$$y_{12} = \left.\frac{I_1}{V_2}\right|_{V_1=0} \qquad y_{22} = \left.\frac{I_2}{V_2}\right|_{V_1=0}$$

$V_2 = 0$

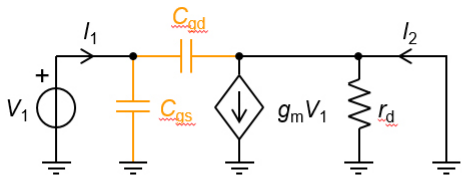

$V_1 = 0$

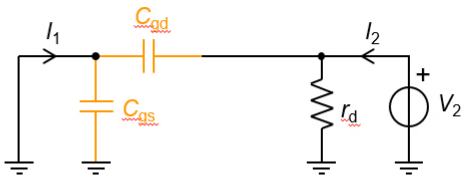

$$I_1 = j\omega(C_{gs} + C_{gd})V_1 \Rightarrow y_{11} = j\omega(C_{gs} + C_{gd})$$
$$I_2 + j\omega C_{gd} V_1 = g_m V_1 \Rightarrow y_{21} = g_m - j\omega C_{gd}$$

$$I_1 = -j\omega C_{gd} V_2 \Rightarrow y_{12} = -j\omega C_{gd}$$
$$I_2 - j\omega C_{gd} V_2 = g_d V_2 \Rightarrow y_{22} = g_d + j\omega C_{gd}$$

(g) Slides 102, 106.

$$h_{21} = \left.\frac{I_2}{I_1}\right|_{V_2=0} = \frac{y_{21}V_1}{y_{11}V_1} = \frac{y_{21}}{y_{11}} = \frac{g_m - j\omega C_{gd}}{j\omega(C_{gs} + C_{gd})} \approx \frac{g_m}{j\omega C_G}$$

$$|h_{21}(f)| \approx \frac{|g_m|}{\omega C_G}$$

$$|h_{21}(f_T)| = 1 = \frac{|g_m|}{2\pi f_T C_G} \Rightarrow f_T = \frac{1}{2\pi}\frac{g_m}{C_G} = \frac{1}{2\pi}\frac{3.1\,\text{mS}}{28.3\,\text{fF}} = 17.4\,\text{GHz}$$

$$C_G = \varepsilon_{ox}\frac{WL}{t_{ox}} = 6.4 \times 8.85 \times 10^{-12}\,\frac{10^{-5} \times 2 \times 10^{-5}}{4 \times 10^{-9}}\,\text{F} = 28.3\,\text{fF}$$

(h) Slide 95. In the linear approximation:

$$Q_{ch} = Q_p - Q_G = C_G V_{th} - C_G V_{GS} = C_G(V_{th} - V_{GS})$$

$$n_{ch} = \frac{|Q_{ch}|}{eA} = \frac{C_{ox}WL|V_{GS} - V_{th}|}{eWL} = \frac{\varepsilon_{ox}}{t_{ox}}\frac{|V_{GS} - V_{th}|}{e} \Rightarrow \sigma_{ch} = n_{ch}e\mu = \frac{\varepsilon_{ox}\mu}{t_{ox}}|V_{GS} - V_{th}|$$

$$G = \frac{W}{L}(\sigma_{th} + \sigma_{ch}) = G_{th} + \frac{W}{L}\frac{\varepsilon_{ox}\mu}{t_{ox}}|V_{GS} - V_{th}| \Rightarrow I_D = GV_{DS} = \left(G_{th} + \frac{W}{L}\frac{\varepsilon_{ox}\mu}{t_{ox}}|V_{GS} - V_{th}|\right)V_{DS}$$

$$g_m = \left.\frac{dI_D}{dV_{GS}}\right|_{V_{DS}=\text{const}} = \pm\frac{W}{L}\frac{\varepsilon_{ox}\mu}{t_{ox}}V_{DS}$$

(i) Slide 95. The operating point is in the $g_m > 0$ part of the transfer curve, hence:

$$g_{\mathrm{m}} = \frac{W}{L}\frac{\varepsilon_{\mathrm{ox}}\mu}{t_{\mathrm{ox}}}V_{\mathrm{DS}} = \frac{C_{\mathrm{G}}}{L^2}\mu V_{\mathrm{DS}} \Rightarrow \mu = \frac{L^2}{C_{\mathrm{G}}}\frac{g_{\mathrm{m}}}{V_{\mathrm{DS}}} = \frac{(0.2\times10^{-6})^2}{28.3\times10^{-15}}\frac{3.1\times10^{-3}}{0.8}\ \mathrm{m^2/(Vs)} = 55\ \mathrm{cm^2/(Vs)}$$

$$v = \mu E = \mu\frac{V_{\mathrm{DS}}}{L} = 55\ \mathrm{cm^2/(Vs)}\frac{0.8\ \mathrm{V}}{0.2\ \mu\mathrm{m}} = 2.2\times10^6\ \mathrm{cm/s}$$

The obtained field-effect carrier mobility is too small for graphene. This is because the calculated mobility is extrinsic, i.e., it is reduced by the contact resistance which becomes comparable to the channel resistance at short gate lengths (which is the case here because L = 200 nm). The actual carrier mobility of graphene (i.e., the intrinsic mobility) is much larger than the extrinsic mobility,

(j) Slide 129.

$$G'(\omega) = \frac{|y_{21}-y_{12}|^2}{4\left(\mathrm{Re}(y_{11})\mathrm{Re}(y_{22})-\mathrm{Re}(y_{12})\mathrm{Re}(y_{21})\right)} = \frac{\left|g_{\mathrm{m}} - j\omega C_{\mathrm{gd}} - (-j\omega C_{\mathrm{gd}})\right|^2}{4\left(\omega^2 R_{\mathrm{G}}(C_{\mathrm{gs}}+C_{\mathrm{gd}})^2 g_{\mathrm{d}} - 0\times g_{\mathrm{m}}\right)} = \frac{g_{\mathrm{m}}^2}{4\omega^2 R_{\mathrm{G}}(C_{\mathrm{gs}}+C_{\mathrm{gd}})^2 g_{\mathrm{d}}}$$

$$G'(\omega_{\max}) = 1 \Rightarrow \frac{g_{\mathrm{m}}^2}{4\omega_{\max}^2 R_{\mathrm{G}}(C_{\mathrm{gs}}+C_{\mathrm{gd}})^2 g_{\mathrm{d}}} = 1 \Rightarrow \omega_{\max} = \frac{|g_{\mathrm{m}}|}{2(C_{\mathrm{gs}}+C_{\mathrm{gd}})\sqrt{R_{\mathrm{G}} g_{\mathrm{d}}}}$$

$$f_{\max} = \frac{\omega_{\max}}{2\pi} = \frac{1}{2\pi}\frac{|g_{\mathrm{m}}|}{(C_{\mathrm{gs}}+C_{\mathrm{gd}})}\frac{1}{2\sqrt{R_{\mathrm{G}} g_{\mathrm{d}}}} = \frac{f_{\mathrm{T}}}{2\sqrt{R_{\mathrm{G}} g_{\mathrm{d}}}} = \frac{17.4\ \mathrm{GHz}}{2\sqrt{20\ \Omega\times0.75\ \mathrm{mS}}} = 71\ \mathrm{GHz}$$